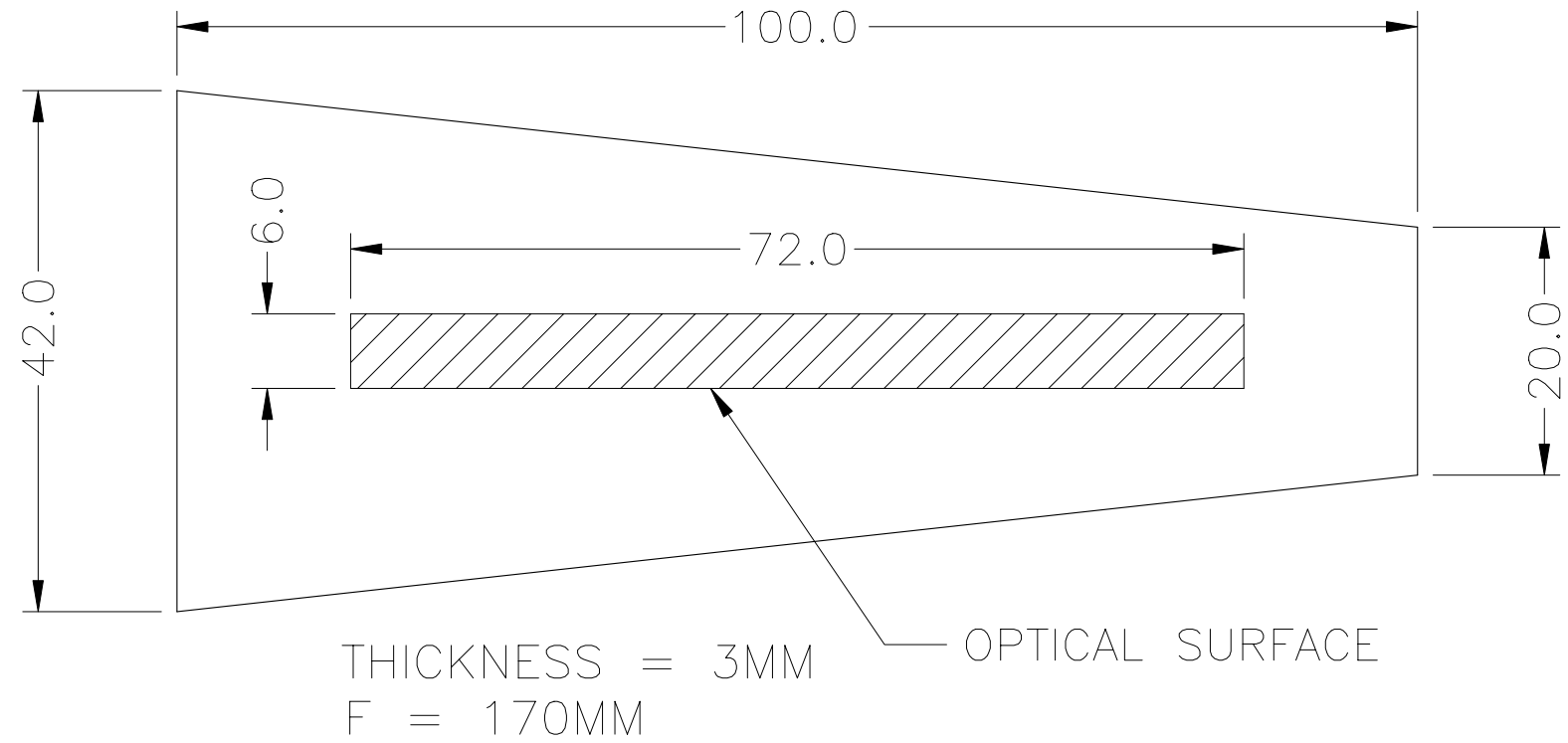
100.0
42.0
6.0
72.0
20.0
OPTICAL SURFACE
THICKNESS = 3MM
F = 170MM

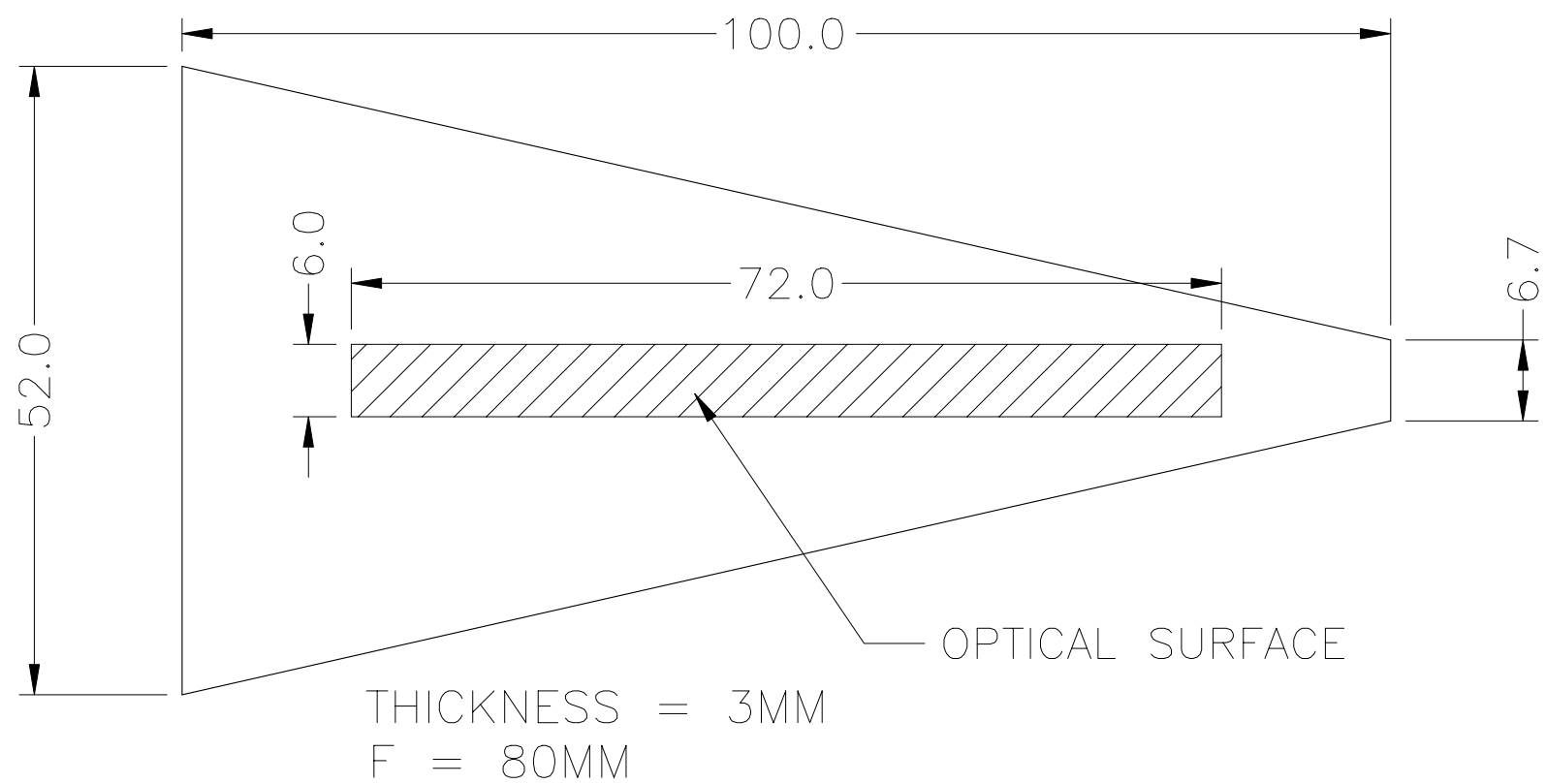
100.0
52.0
6.0
72.0
6.7
OPTICAL SURFACE
THICKNESS = 3MM
F = 80MM